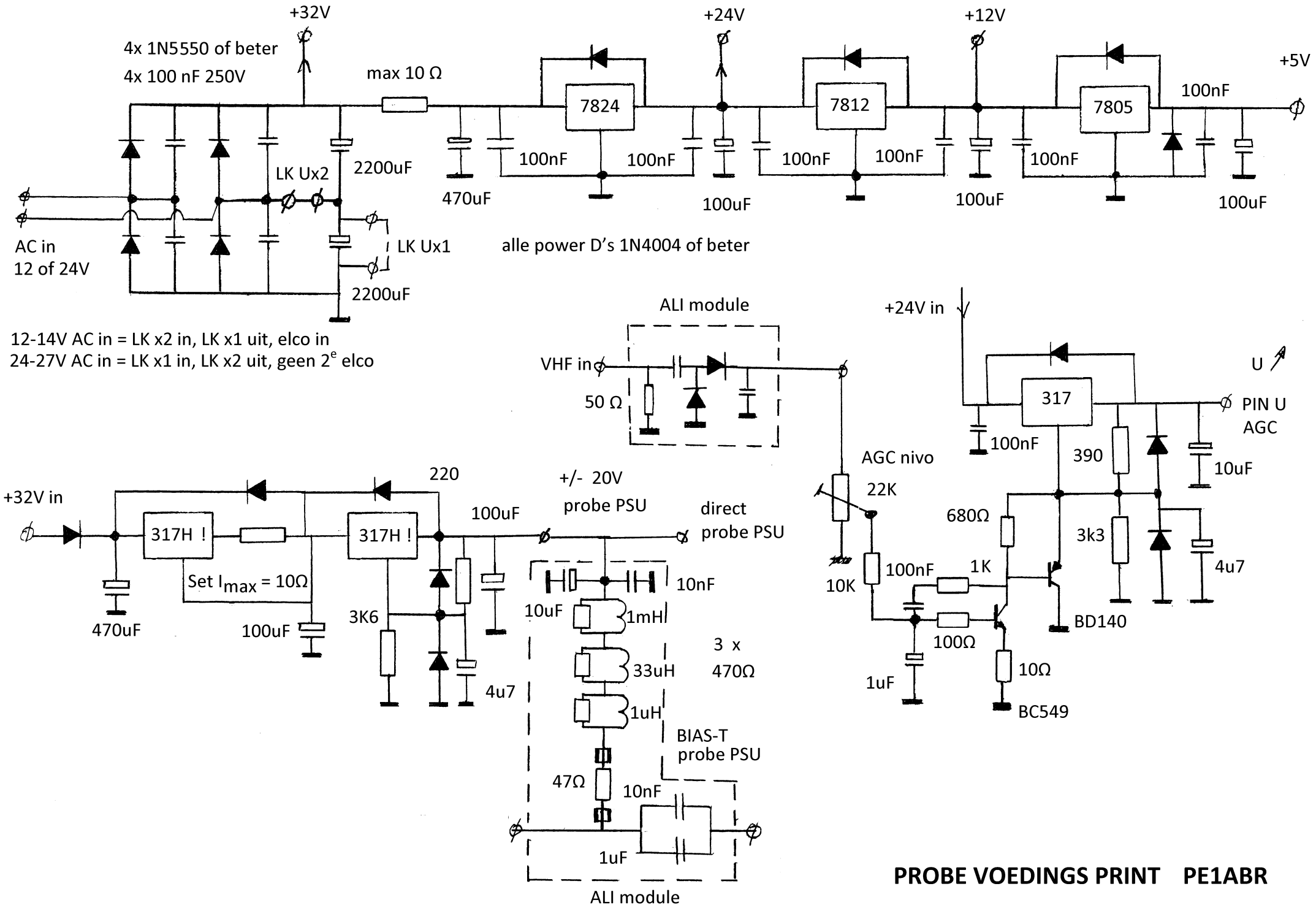

PROBE VOEDINGS PRINT PE1ABR

GND
+24
+12
+5
AGC
Bias
Sec
GND
PE1ABR
x1
x2
AC
5V
5V

GND
+5
+12
+24
AGC
Bias
Jap
GND
PE1ABR
x1
x2
AC
12V/ 24V