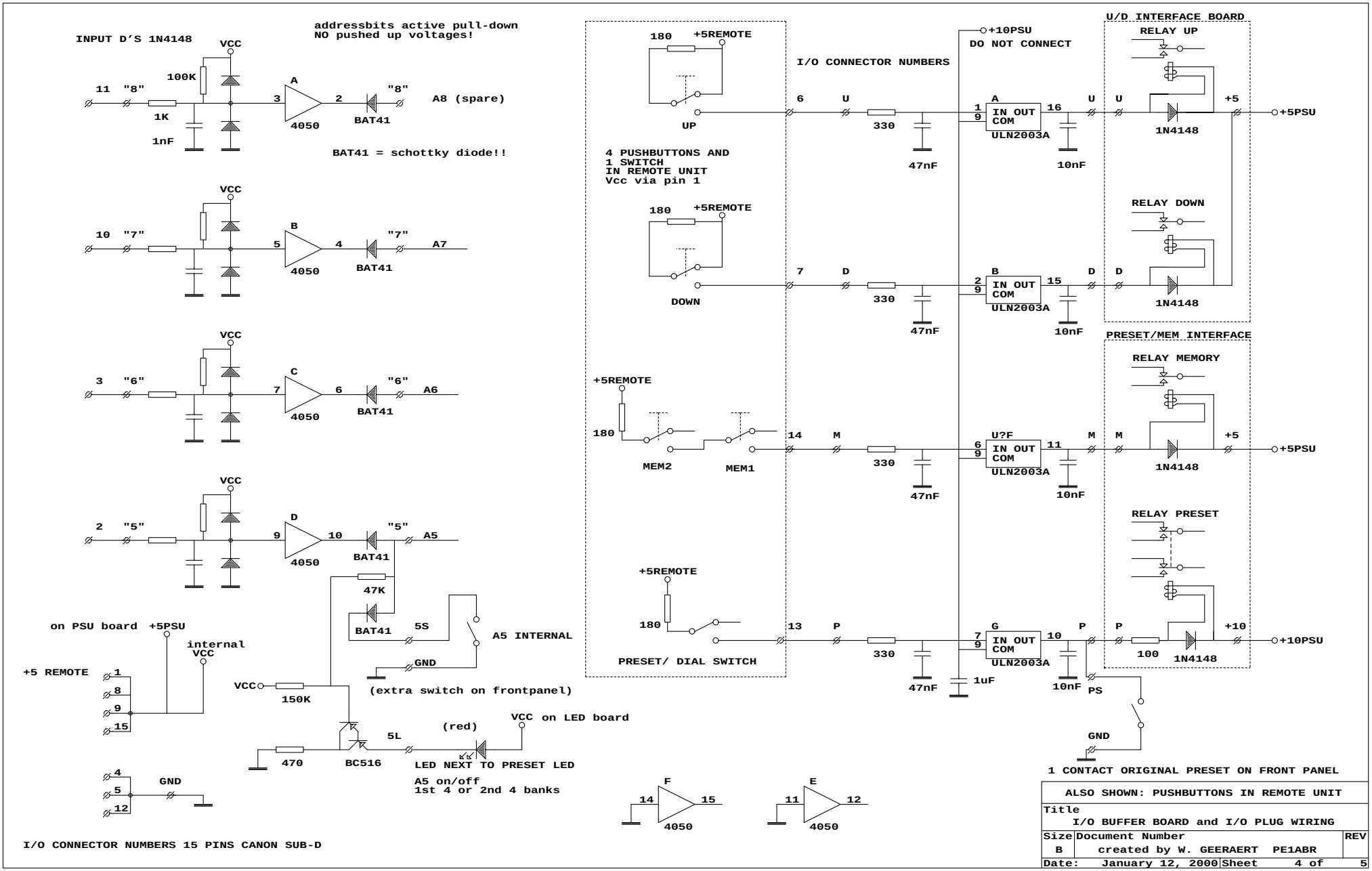

ALSO SHOWN: PUSHBUTTONS IN REMOTE UNIT

Title	I/O BUFFER BOARD and I/O PLUG WIRING	
Size B	Document Number created by W. GEERAERT PE1ABR	REV
Date: January 12, 2000	Sheet 4 of 5	